Safety. Detection. Control.

SAFETY SENSORS

Safety Contactless Sensors and Devices

Issue 1

Product catalogue

REER

OVERVIEW

Magnus RFID:
next generation sensors for machine safety

Available with
22 or 78 mm interaxis

Status LED

3 different
coding levels

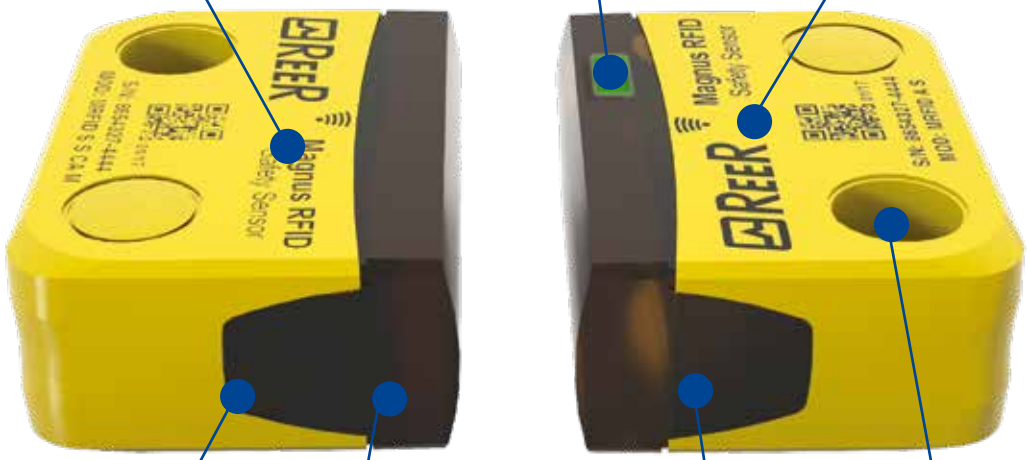

M12 connector pigtail
or 5 meters cable

Anti-tampering
protective caps

State-of-the-art
RFID technology

IP67 and
IP69K approved

Magnus RFID

RFID safety switch

See page 4

OVERVIEW

Magnus MG
Magnetic safety switches
See page 11

Pharo
Type 3 laser scanner
See page 17

Ilion
Type 2 safety photocells
See page 21

Ulisse
Type 2 safety photocells
See page 23

SAFECODER
Safety Sin/Cos incremental encoder
See page 25

SAFELOCK
Safety switch with guard locking
See page 26

MAGNUS RFID

The best in cost-effectiveness

- Wear-free technology allows for longer life time
- Status LED and diagnostic output
- Smallest design of RFID safety sensors
- Full mechanical compatibility with Magnus MG S and MG B
- Can be used as a stand-alone

The best in safety

- Tampering protection in accordance with DIN EN 14119, the highest in its class
- Screw covers prevent easy removal
- Series connection up to PL e / SIL 3

The best in versatility

- Dual mounting options
- M12 connector or cable
- IP67 and IP6K9K protection grade for use in harsh environments
- Complies with the strict hygiene and cleaning requirements of the food and packaging industry
- 3 different coding levels
- Extension cables for series connection

-25 ... +70 °C

Operating temperature:
-25 ... +70 °C

IP67

High protection classes IP67 and IP6K9K for use in harsh environments.

IP6K9K

Resistant to aggressive media, e.g. cleaning agents used in the food industry.

Vibration resistance:
10…55 Hz, amplitude 1 mm.

OVERVIEW

The application of Magnus RFID sensors can be extremely wide thanks to the compact and versatile design.

The different design and technology options and the complete mechanical compatibility with Magnus MG series make this product extremely valuable for users.

The RFID technology enables Magnus RFID sensors to be individually coded in three different ways to allow the appropriate tampering protection in all applications. The highest configurations allow each sensor to be paired with one only assigned actuator.

The RFID technology used allows to reach safety levels up to PL e / SIL 3 also when connecting the sensors in series.

As a result, Magnus RFID sensors can be simply integrated in existing safety scenarios, offering a cost-effective solution for modifying and upgrading machines.

Multiple options of actuation technology

- Individual coding
  The actuator is programmed via teach-in and permanently assigned to the sensor during set-up (the process can be repeated if necessary)
- Unique coding
  The actuator is permanently assigned to the sensor during manufacturing (it cannot be replaced with another actuator)
- Actuator coded
  The actuator is free and not specifically assigned to the sensor (one actuator can work with multiple sensors)

Ideal also in the most demanding applications

Unique mechanical characteristics allow protection against cleaning agents and washdown processes, a typical requirement of the food industry.

MAGNUS RFID

SERIES CONNECTION WITH MAXIMUM SAFETY

Up to (PL e Performance Level)
according to EN ISO 13849-1

Reliable evaluation,
e.g. with the modular safety
controller Mosaic...
MOSAIC

...or with the AD SR1
configurable safety
control unit

Transition time between Input and Output: 3 ms, the shortest in the market

MAGNUS RFID RANGE

S series
22 mm interaxis

Dimensions compatible with Magnus MG S series

B series
78 mm interaxis

Dimensions compatible with Magnus MG B series

CONNECTIVITY

Cable or M12 Connector
Magnus RFID satisfies all requirements with regard to connectivity.

Cable (5 m)

M12 Connector (15 cm pigtail)

MAGNUS RFID

CODE LEGEND (ORDERING INFORMATION)

Combo (Sensor + Actuator)[1]

M RFID C S I A 5

- 5: M M12 Connector; 5 5 m cable
- A: A Automatic EDM input
- I: I Individual coding; U Unique coding; C Actuator coded
- S: S 22 mm interaxis; B 78 mm interaxis

Extension cable (for series connection)

M RFID EC S 4 5

- 5: 1 1 m cable; 3 3 m cable; 5 5 m cable; 10 10 m cable
- 4: 4 4 poles connector 4 wires cable; 8 8 poles connector 8 wires cable
- S: S Male - Female M12 connector (straight); L Male - Female M12 connector (90°)[2]; C Female M12 connector

T Connectors (for series connection)

M RFID TC A

- A: A M12 Type A; B M12 Type B; C M12 Type C

Accessories

M RFID SP	Spacers available for S or B series (recommended for mounting on metal surfaces)
M RFID TP	Termination plug (to close the last Type B connector in series connections of 2 or more sensors)

1. Each Combo set is provided with a Sensor and the corresponding Actuator. Sensors and Actuators can be also ordered separately, please enquire within
2. 4-pole version available only

APPROVALS

- 2006/42/EC "Machine Directive"
- 2014/30/EC "Electromagnetic Compatibility Directive"
- 2014/35/EC "Low Voltage Directive"
- IEC 61508-1 (ed. 2) (SIL3) "Functional safety of electrical/electronic programmable electronic safety related systems - General requirements"
- IEC 61508-2 (ed. 2) (SIL3) "Functional safety of electrical/electronic/programmable electronic safety related systems - Requirements for electrical/electronic/programmable electronic safety-related systems"
- IEC 61508-3 (ed. 2) (SIL3) "Functional safety of electrical/electronic programmable electronic safety related systems: Software requirements"
- IEC 62061: "Safety of machinery - Functional safety of safety-related electrical, electronic and programmable electronic control systems"
- ISO 13849-1:2015 "Safety of machinery - Safety-related parts of control systems - Part 1: General principles for design"

SAFETY LEVEL
Cat. 4
SIL 3 - SILCL 3
PL e

MAGNUS RFID

S series

B series

Mechanical data

	S series	B series
Housing material	PBT / PC	
Housing	Rectangular	
Connector type	Pigtail M12 / 8-pole / 150mm	
Cable	5 m PVC / 8 wires	
Cross-section of wire (mm²)	0,25	
Dimensions h w d (mm)	26 x 36 x 13	26 x 88 x 13
Fastening	M4 screws (countersunk)	

Environmental features

	S series / B series
Protection class	IP67 (all versions) IP6K9K (cable versions only)
Operating temperature	- 25 °C ... +70 °C
Shock resistance	30 g /11 ms
Vibration resistance (Hz)	10…55 , amplitude 1 mm

TECHNICAL FEATURES

Electrical specifications

	S series / B series
Supply voltage (VDC)	24 ± 10%
Max. switching voltage (V)	Supply voltage ± 0,2 V
Switching current safety output (mA)	Max. 400
Switching current control output (mA)	Max. 50
Response time (ms)	Input-Output: 3 Sensor-Actuator: 75
Contact form	OSSD
Switching frequency (Hz)	3
No. of safety outputs electronic	2
No. of diagnostic outputs electronic	1
Number of safety inputs	2
EDM input	Yes
Start button	Yes
Functional category	DC-12 / DC-13
Assured switching distance (mm)	8
Safe distance for switching off (mm)	18
Minimum air-gap (mm)	0,5
Misalignment actuator max. (mm)	Max. 8
Reverse polarity protection	Yes
Short-circuit proof outputs	Yes
Current consumption per input (mA)	2,75
Indication LED	Three-colour
Operating direction	Any direction
Switching principle	Electronic
Repeating accuracy R (mm)	< 0,5
Hysteresis (mm)	2
Series connection	Max. 30 sensors
Technology	RFID

MAGNUS RFID

PART NUMBERS

Combo (Sensor + Actuator) 22 mm interaxis

Ordering code	Model	Connection	Description
1292000	MRFID C S CA M	M12 connector	Actuator coded
1292003	MRFID C S CA 5	5 m cable	
1292010	MRFID C S IA M	M12 connector	Individual coding
1292013	MRFID C S IA 5	5 m cable	
1292020	MRFID C S UA M	M12 connector	Unique coding
1292023	MRFID C S UA 5	5 m cable	

Combo (Sensor + Actuator) 78 mm interaxis

Ordering code	Model	Connection	Description
1292100	MRFID C B CA M	M12 connector	Actuator coded
1292103	MRFID C B CA 5	5 m cable	
1292110	MRFID C B IA M	M12 connector	Individual coding
1292113	MRFID C B IA 5	5 m cable	
1292120	MRFID C B UA M	M12 connector	Unique coding
1292123	MRFID C B UA 5	5 m cable	

Individual sensors 22 mm interaxis

Ordering code	Model	Connection	Description
1292200	MRFID S S CA M	M12 connector	Actuator coded
1292203	MRFID S S CA 5	5 m cable	
1292210	MRFID S S IA M	M12 connector	Individual coding
1292213	MRFID S S IA 5	5 m cable	

Individual sensors 78 mm interaxis

Ordering code	Model	Connection	Description
1292300	MRFID S B CA M	M12 connector	Actuator coded
1292303	MRFID S B CA 5	5 m cable	
1292310	MRFID S B IA M	M12 connector	Individual coding
1292313	MRFID S B IA 5	5 m cable	

Individual actuators

Ordering code	Model	Description
1292290	MRFID A S	Actuator for sensors 22 mm interaxis
1292390	MRFID A B	Actuator for sensors 78 mm interaxis

Spacers *

Ordering code	Model	Description
1292401	MRFID SP S	Spacer for sensors 22 mm interaxis
1292400	MRFID SP B	Spacer for sensors 78 mm interaxis

* Ordering code includes one spacer.

AVAILABLE CABLES

- Male - Female M12 4-pole or 8-pole straight connectors. See page 37
- Male - Female M12 4-pole 90° angled connectors. See page 37
- Female M12 4-pole or 8-pole connectors. See page 38
- Type A, B, C T connectors. See page 38
- Termination plug. See page 38

MECHANICAL DATA

DIMENSIONS

S series

Cable version

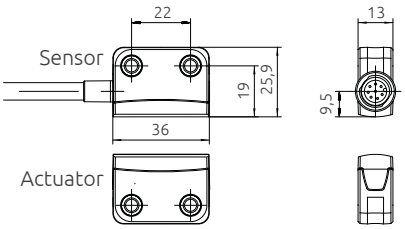

B series

Cable version

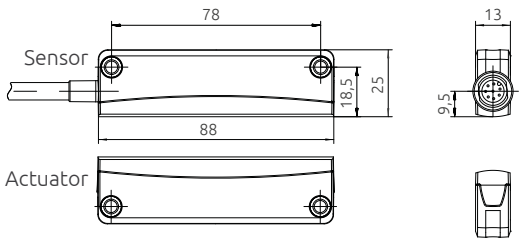

M12 Connector version

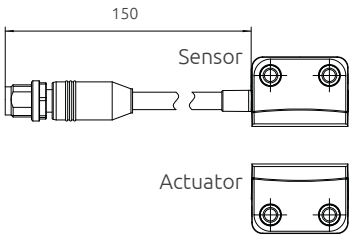

M12 Connector version

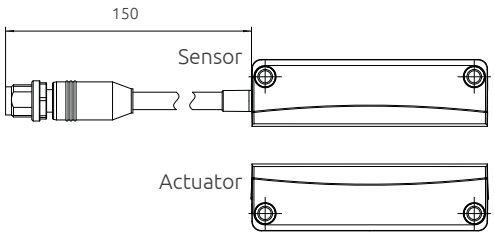

Spacer S

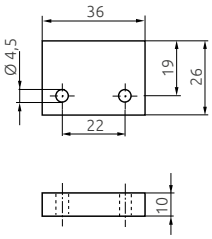

Spacer B

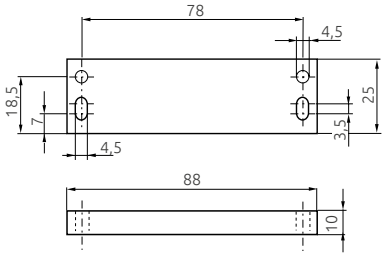

Dimensions: mm

ACCESSORIES

T Connectors

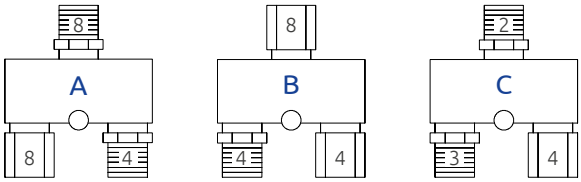

Type A To gain status output from the connected sensor
Type B For series connections of 2 or more sensors
Type C To introduce additional power supplies in long series

Extension cables

Type S
Male - Female
M12 connector (straight)
Lenght: 1, 3, 5, 10 m
Poles: 4 or 8

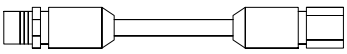

Type L
Male - Female
M12 connector (90°)
Lenght: 1, 3, 5, 10 m
Poles: 4

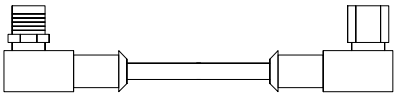

Type C
Female M12 connector
Lenght: 1, 3, 5, 10 m
Poles/wires: 4 or 8

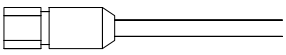

MAGNUS RFID

CIRCUIT DIAGRAM

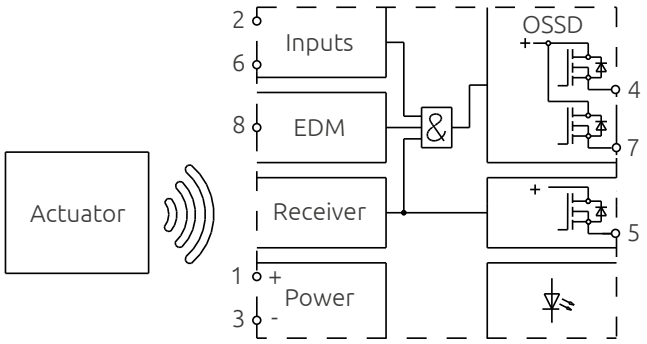

PIN-OUT

Pin	Function
1	VDC
2	Safety input 1
3	GND
4	Safety output 1
5	Diagnostic output
6	Safety input 2
7	Safety output 2
8	EDM input

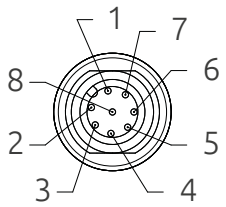

SERIES CONNECTION EXAMPLE

F2 Power supply circuit

F1 Power supply Circuit

F1 Q1 Q2 24V DC bn OUT CH1 ws 0V DC bl OUT CH2 sw

Power supply and load contactors Q1 e Q2

M RFID EC C 4 1
M RFID EC C 4 3
M RFID EC C 4 5
M RFID EC C 4 10

Female M12 connector
Lenght: 1, 3, 5, 10 m
Poles/wires: 4

M RFID TP
Termination plug

M RFID EC L 4 1
M RFID EC L 4 3
M RFID EC L 4 5
M RFID EC L 4 10

Male - Female
M12 connector (90°)
Lenght: 1, 3, 5, 10 m
Poles: 4

M RFID EC L 4 1
M RFID EC L 4 3
M RFID EC L 4 5
M RFID EC L 4 10

Male - Female
M12 connector (90°)
Lenght: 1, 3, 5, 10 m
Poles: 4

Type B — M RFID TC B
Series connection

Type C — M RFID TC C
Additional power supply

Type B — M RFID TC B
Series connection

Type A — M RFID TC A
Status output

M RFID EC S 8 1
M RFID EC S 8 3
M RFID EC S 8 5
M RFID EC S 8 10

Male - Female
M12 connector (straight)
Lenght: 1, 3, 5, 10 m
Poles: 8

M RFID EC S 4 1
M RFID EC S 4 3
M RFID EC S 4 5
M RFID EC S 4 10

Male - Female
M12 connector (straight)
Lenght: 1, 3, 5, 10 m
Poles: 4

M RFID EC C 4 1
M RFID EC C 4 3
M RFID EC C 4 5
M RFID EC C 4 10

M RFID C S series
M RFID C B series

Sensor 1
automatic
Restart/EDM

bn 24V DC ws Control bl 0V DC sw EDM/restart Q2 Q1

Coupling in of restart signal with external device monitoring (EDM) of Q1/Q2 and displaying control output (via LED)

M RFID EC C 4 1
M RFID EC C 4 3
M RFID EC C 4 5
M RFID EC C 4 10

Female M12 connector
Lenght: 1, 3, 5, 10 m
Poles/wires: 4

M RFID C S series
M RFID C B series

Sensor 3
automatic
Restart/EDM

Alimentazione addizionale F2 24V DC bn 0V DC bl

M RFID C S series
M RFID C B series

Sensor 2
automatic
Restart/EDM

M RFID EC C 8 1
M RFID EC C 8 3
M RFID EC C 8 5
M RFID EC C 8 10

Female M12 connector
Lenght: 1, 3, 5, 10 m
Poles/wires: 8

MAGNUS MG

Compact and robust thermoplastic enclosure (PBT).

22 mm fixing.

Coded magnetic operation – Tamper resistant.

Can be connected to Mosaic safety configurable controller (PL e) or to the dedicated safety control unit MG d1 (PL d).

MG S switches connected to Mosaic safety controller form a certified PL e safety system.

Switching distance: 3 - 10 mm.

Sensor with 4 wires: 2 NO contacts.

Operating temperature: -25 ... +75 °C

-25 ... +75 ºC

IP67 rating

MG S

RECTANGULAR COMPACT HOUSING

TECHNICAL FEATURES

Operating voltage (VDC)	24
Switching current (mA)	Max. 100
Series resistance (Ohm)	22
Switching power (W)	3
Shock resistance (Hz/g)	10 - 2000/35
Housing material	PBT
Possible actuation magnets	MG S M to be ordered separately

PART NUMBERS

Magnus MG S includes multi-language instruction manual and CE declaration of conformity.

MG S 20 ordering code: **1291000**
MG S M ordering code: **1291001**

CABLES NEEDED

M8 4-pole. See page 35 (CGx, CG9x)

ACCESSORIES

MG d1 Control Unit. See page 32

CONNECTOR

M8 4-pole connector.

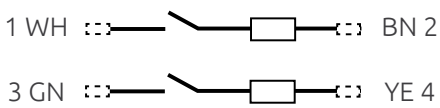

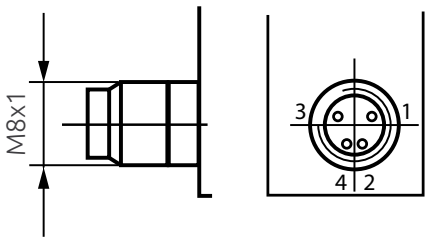

MAGNUS MG

APPROVALS

Safety Level PL e when connected to Mosaic
Up to PL d when connected to MG d1

- 2006/42/EC: “Machine Directive”
- 2014/30/EU: “Electromagnetic Compatibility Directive”
- 2014/35/EU: “Low Voltage Directive”
- EN 61508-1:1998 “Functional safety of electrical/electronic programmable electronic safety related systems - General requirements”
- EN 61508-2:2000 “Functional safety of electrical/electronic/programmable electronic safety related systems - Requirements for electrical/electronic/programmable electronic safety-related systems”
- EN 61508-3:1998 “Functional safety of electrical/electronic programmable electronic safety related systems: Software requirements”
- ISO 13849-1:2008 “Safety of machinery - Safety-related parts of control systems - Part 1: General principles for design”
- IEC 62061: “Safety of machinery - Functional safety of safety-related electrical, electronic and programmable electronic control systems”

MECHANICAL DATA

DIMENSIONS

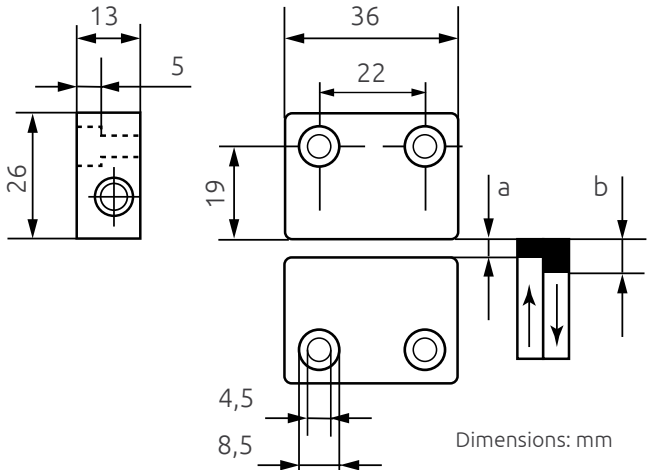

Gaps (operating distance) for safe switching function in mm:

MINIMUN GAP	0,5	-
ON	3	a
OFF	10	b

MAGNUS MG

Robust thermoplastic enclosure (PBT).

78 mm fixing.

Coded magnetic operation – Tamper resistant.

Can be connected to Mosaic safety configurable controller (PL e) or to the dedicated safety control unit MG d1 (PL d).

MG B switches connected to Mosaic safety controller form a certified PL e safety system.

Switching distance:

- 4 - 16 mm
- 7 - 18 mm with magnet MG B M+

Sensor with 4 wires: 2 NO contacts

Operating temperature: -25 ... +75 °C

-25 ... +75 °C

IP67 rating

MG B

RECTANGULAR HOUSING

TECHNICAL FEATURES

Operating voltage (VDC)	24
Switching current (mA)	Max. 100
Series resistance (Ohm)	22
Switching power (W)	3
Shock resistance (Hz/g)	10 - 2000/35
Housing material	PBT
Possible actuation magnets	MG B M to be ordered separately
Possible actuation reinforced magnets	MG B M+ to be ordered separately (only use reinforced actuation magnets if a gap of more than 4 mm is unavoidable)

PART NUMBERS

Magnus MG M includes multi-language instruction manual and CE declaration of conformity.

MG B 20 ordering code: **1291010**
MG B M ordering code: **1291011**
MG B M+ ordering code: **1291012**

CABLES NEEDED

M8 4-pole. See page 35 (CGx, CG9x)

ACCESSORIES

MG d1 Control Unit. See page 32

CONNECTOR

M8 4-pole connector

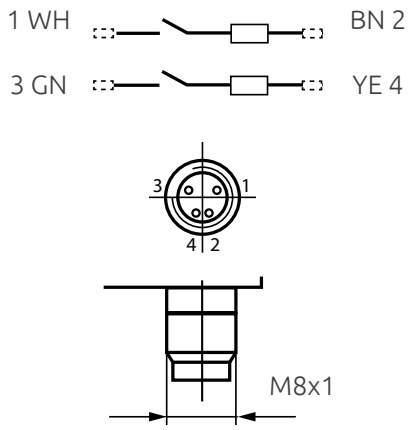

MAGNUS MG

APPROVALS

Safety Level PL e when connected to Mosaic
Up to PL d when connected to MG d1

- 2006/42/EC: “Machine Directive”
- 2014/30/EU: “Electromagnetic Compatibility Directive”
- 2014/35/EU: “Low Voltage Directive”
- EN 61508-1:1998 “Functional safety of electrical/electronic programmable electronic safety related systems - General requirements”
- EN 61508-2:2000 “Functional safety of electrical/electronic/programmable electronic safety related systems - Requirements for electrical/electronic/programmable electronic safety-related systems”
- EN 61508-3:1998 “Functional safety of electrical/electronic programmable electronic safety related systems: Software requirements”
- ISO 13849-1:2008 “Safety of machinery - Safety-related parts of control systems - Part 1: General principles for design”
- IEC 62061: “Safety of machinery - Functional safety of safety-related electrical, electronic and programmable electronic control systems”

MECHANICAL DATA

DIMENSIONS

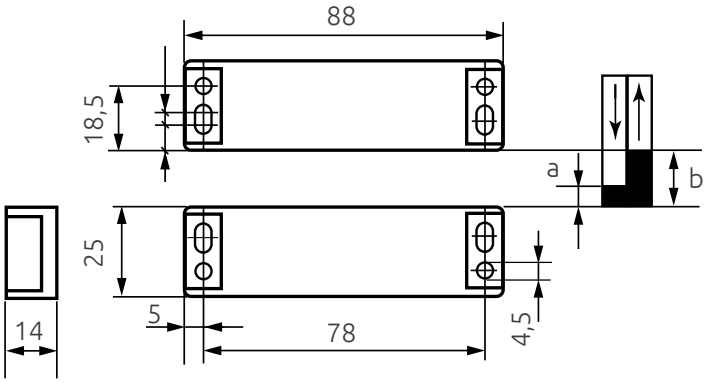

Dimensions: mm

Gaps (operating distance) for safe switching function in mm:

MINIMUM GAP	normal with + magnet	0,5 3	
ON	normal with + magnet	4 7	a
OFF	normal with + magnet	16 18	b

+ = reinforced

MG M M

MG M M+

MG M 20

Robust cylindrical thermoplastic enclosure.

30 mm diameter.

Coded magnetic operation – Tamper resistant.

Can be connected to Mosaic safety configurable controller (PL e) or to the dedicated safety control unit MG d1 (PL d).

MG M switches connected to Mosaic safety controller form a certified PL e safety system.

Switching distance:

- 4 - 16 mm
- 7 - 20 mm with magnet MG M M+

Sensor with 4 wires: 2 NO contacts.

Operating temperature: -25 ... +75 °C

-25 ... +75 °C

IP65 rating

MG M 20

CYLINDRICAL HOUSING

TECHNICAL FEATURES

Operating voltage (VDC)	24
Switching current (mA)	max. 100
Series resistance (Ohm)	22
Switching power (W)	3
Shock resistance (Hz/g)	10 - 2000/35
Housing material	PBT
Possible actuation magnets	MG M M to be ordered separately
Possible actuation reinforced magnets	MG M M+ to be ordered separately (only use reinforced actuation magnets if a gap of more than 4 mm is unavoidable)

PART NUMBERS

Magnus MG M 20 includes multi-language instruction manual and CE declaration of conformity

MG M 20 ordering code: **1291020**
MG M M ordering code: **1291021**
MG M M+ ordering code: **1291022**

CABLE NEEDED

M8 4-pole. See page 35 (CGx, CG9x)

ACCESSORIES

MG d1 Control Unit. See page 32

CONNECTOR

M8 4-pole connector

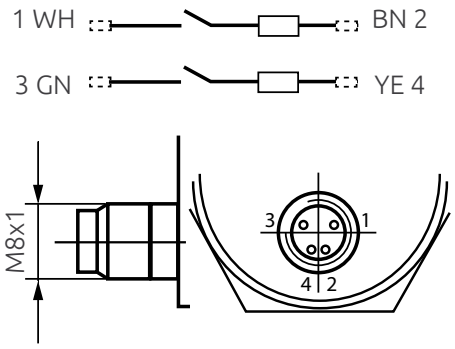

MAGNUS MG

APPROVALS

Safety Level PL e when connected to Mosaic
Up to PL d when connected to MG d1

- 2006/42/EC: "Machine Directive"
- 2014/30/EU: "Electromagnetic Compatibility Directive"
- 2014/35/EU: "Low Voltage Directive"
- EN 61508-1:1998 "Functional safety of electrical/electronic programmable electronic safety related systems - General requirements"
- EN 61508-2:2000 "Functional safety of electrical/electronic/programmable electronic safety related systems - Requirements for electrical/electronic/programmable electronic safety-related systems"
- EN 61508-3:1998 "Functional safety of electrical/electronic programmable electronic safety related systems: Software requirements"
- ISO 13849-1:2008 "Safety of machinery - Safety-related parts of control systems - Part 1: General principles for design"
- IEC 62061: "Safety of machinery - Functional safety of safety-related electrical, electronic and programmable electronic control systems"

MECHANICAL DATA

DIMENSIONS

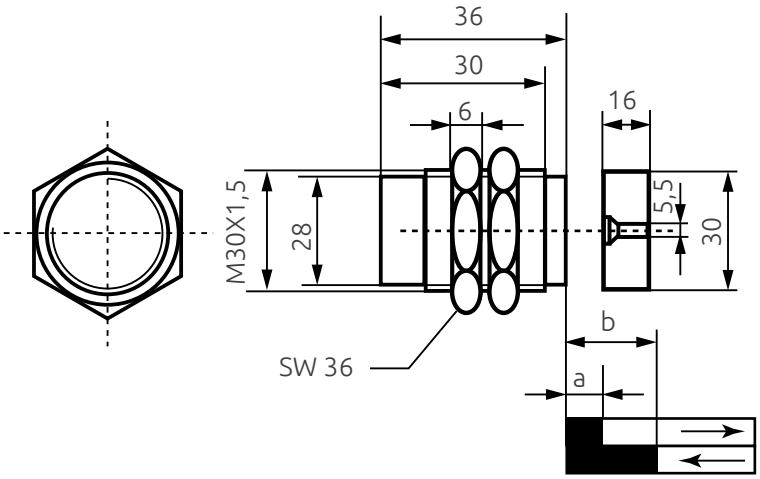

Dimensions: mm

Gaps (operating distance) for safe switching function in mm:

MINIMUM GAP	normal with + magnet	0,5 3	
ON	normal with + magnet	4 7	a
OFF	normal with + magnet	16 18	b

+ = reinforced

PHARO

The Pharo Safety Laser Scanner is an optoelectronic protection device for accident prevention. Pharo is suitable for the protection of personnel exposed to risks deriving from both machines and systems with dangerous organs as well as from possible collisions with automatic guided vehicles (AGVs).

With the Pharo Safety Laser Scanner it is possible to create programmable protected horizontal or vertical areas of variable shape suitable to all applications without the need to use a separate reflector or receiver.

The device does not require an external control unit because all the safety functions are built-in.

The Pharo Safety Laser Scanner features a Configuration Memory Module built into the removable connector, which stores the data related to the protected zones programmed and to the operating parameters set.

This module enables the user to replace a faulty sensor with a new device without the need for reconfiguration and therefore maintaining the pre-existing configuration, without the possibility of errors or tampering.

The stored data can only be modified by authorised personnel.

Each sensor can create 2 independently programmable controlled zones:

- 2 safety zones with maximum radius of 4 metres
- 2 warning zones with maximum radius of 20 metres

MAIN FEATURES

Model	PHR 332
Protective (safety) fields	2 programmable
Warning zones	2 programmable
Scanning area	190° / 4 m radius
Programming by means	- graphic user interface - teach-in - data transfer from file (from PC or from another laser scanner).
Resolution	Configurable from 30 mm to 150 mm from hand detection to access control
Configuration Memory Module	Yes for easy re-installation
Configuration	Software via RS 232 serial port
Diagnostic	Detailed self-diagnosis via display and remote serial output
Start/restart interlock	Built-in start/restart interlock, selectable
EDM	Feedback input for control of external relays (EDM)

Operating temperature: -10 ... +50 °C

-10 ... +50 °C

IP65 protection rating

PHARO

APPROVALS

- 2006/42/EC: “Machine Directive”
- 2014/30/EU: “Electromagnetic Compatibility Directive”
- 2014/35/EU: “Low Voltage Directive”
- EN 61496-1:2004/A1:2008 “Safety of machinery - Electro sensitive protective equipment - General requirements and tests”
- IEC 61496-3:2008 "Safety of machinery - Electro-sensitive protective equipment - Particular requirements for Opto-electronic protective device responsive to diffuse reflection
- EN 62061:2005 “Safety of machinery - Functional safety of safety-related electrical, electronic and programmable electronic control systems”
- EN ISO 13849-1:2008 + AC:2009 “Safety of machinery - Safety-related parts of control systems - Part 1: General principles for design”
- IEC 61508 parts 1-7:1998/2000 "Functional safety of electrical/electronic programmable electronic safety related systems"
- EN 50178:1997 “Electronic equipment for use in power installations”
- EN 60204-1:2006/A1:2009 "Safety of machinery - Electrical equipment of machines"
- EN 60950-1:2006/A1:2010 "Information technology equipment - Safety"
- UL (C+US) mark for USA and Canada
- ANSI B11.19:2003
- ANSI/RIA R15.06:1999

SAFETY LEVEL

TYPE 3

SIL 2 - SILCL 2
PL d - Cat. 3

Certified by TÜV Rheinland Product Safety GmbH

RoHS Compliant

MECHANICAL DATA

DIMENSIONS

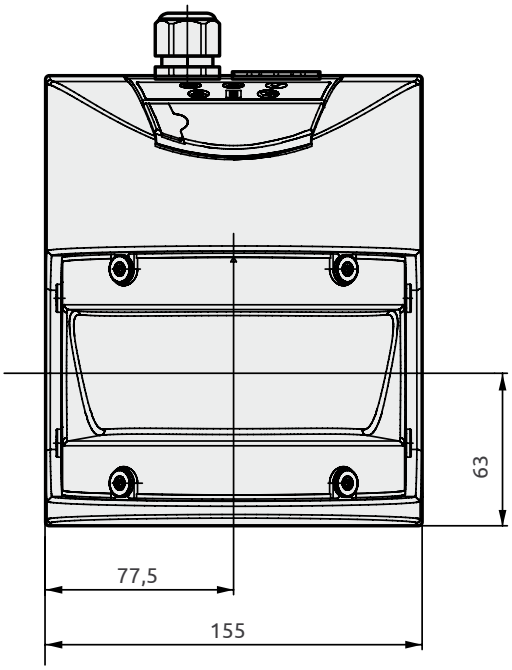

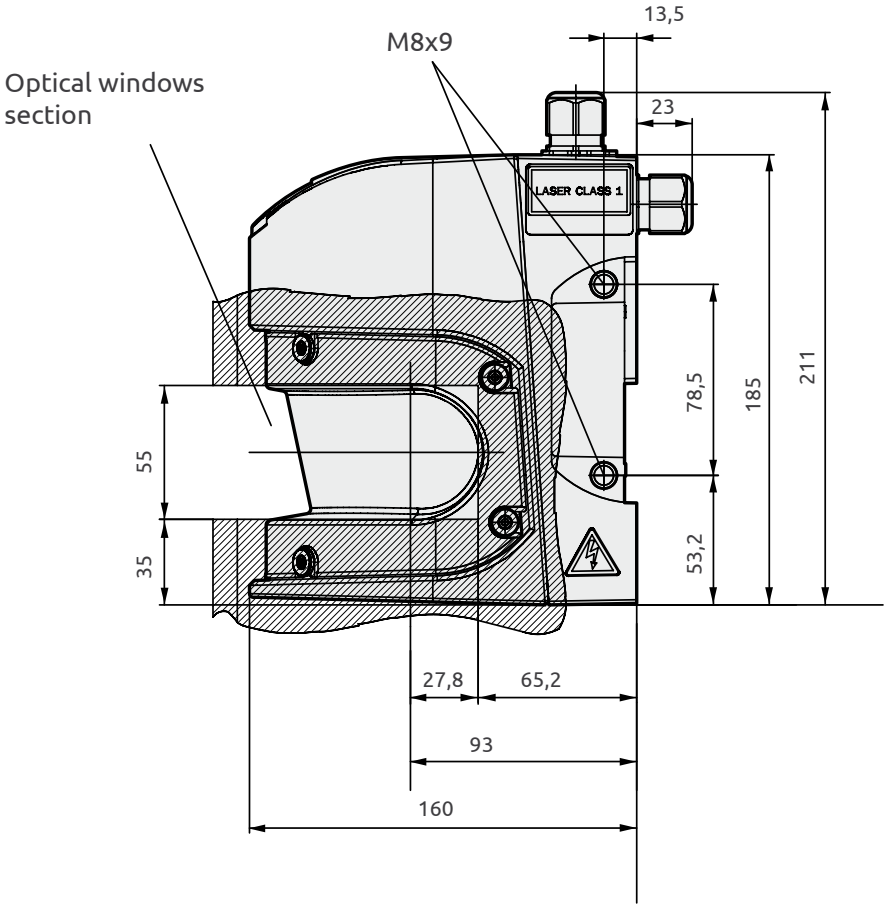

PART NUMBERS

Includes CD-ROM containing configuration software in English and Italian and multi-language instruction manual and CE declaration of conformity.

Ordering code: **1350041**

TECHNICAL DATA

Light source	Laser diode wavelength 905 nm
Laser source class	1 - according to EN 60825-1
Scanning angle	190°
Angular resolution	0,25° ... 0,50°
Response time (ms)	Configurable 60 or 120 (with 2 scans)
Start/Restart	Automatic - timed automatic - manual reset (selectable via software)
Serial interface configuration	RS 232
Serial interface data transmission	RS 422
Configuration and operating parameter setting	Via configuration software (UCS)
Configuration Memory Module	Built into the main connector
Signalling	Display indications in 7 segments and LEDs for self-diagnosis and sensor status
Power supply (VDC)	24 -30% +20%
External relay control	Feedback input with enabling, selectable
Main connection	Connector with screw terminals (13 poles cable)
Serial interface connection for configuration	Cable pre-wired with 2 connectors: M8 4-pole / subD 9-pole
Electrical connections	Max. cable length 30 m, cross-section 0.5 mm²

SAFETY ZONE

Max. range (m)	4
Resolution (mm)	30, 40, 50, 70, 150 configurable
Min. target reflectivity	1,8%
Safety outputs	2 PNP self-testing - 500 mA at 24 VDC

WARNING ZONE

Max. range (m)	20 (for objects with 20% reflectivity)
Resolution (mm)	Depending on the distance of the obstacle
Min. target reflectivity	20% at 20 m
Signalling outputs	1 PNP - 200 mA at 24 VDC

ACCESSORIES

The following accessories are available for Pharo, to be ordered separately:

Model	Code	Description
PHR C3L5	1350061	30 poles connector pre-wired with 13-wire cable 5 m long Built-in Configuration Memory Module
PHR CSL2	1350070	Cable for serial connection between Pharo sensor and PC for configuring M8 4-pole / subD 9-pole connector, length 2 m
PHR B3	1350050	fixed attachment bracket
PHR B4	1350051	adjustable attachment bracket
PHR B5	1350052	floor mounting bracket

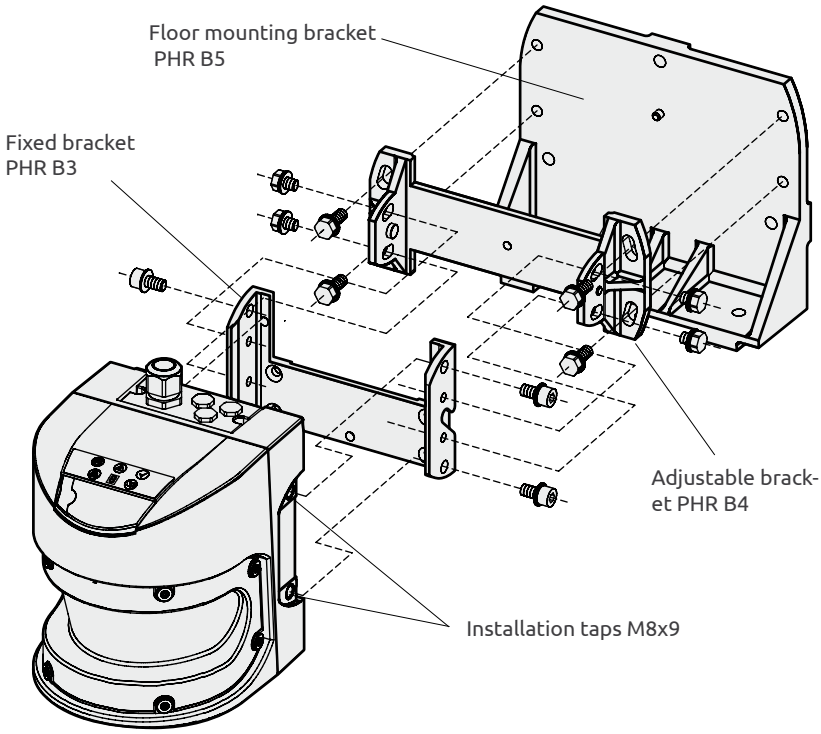

WARNING!

For the main connection of the Pharo laser scanner, it is necessary to provide a 13-wire cable with 0.56 mm² cross-section. This cable is supplied with the PHR C3L5 main connector.
To use the PHR B4 adjustable bracket it is also necessary to order the PHR B3 fixed bracket.
To use the PHR B5 floor mounting bracket it is also necessary to order the PHR B3 fixed bracket and the PHR B4 adjustable bracket.

ILION

Ilion is a Type 2 safety photocell with M18 cylindrical metal body.

The photocells must be connected to control unit for esample: AU SX or AU SXM control unit with Muting to form a protection system that can be composed of 1, 2, 3 or 4 single beam photocells or Mosaic.

In case of connection with Mosaic safety controller, the number of photocells depends to the configuration of the protection system (for details on the interface see AU SX, AU SXM and Mosaic control units).

The compact size of the photocells makes it possible to fit the protection system into very small spaces, while the possibility to use more photocells provides the maximum flexibility in positioning the protective beams.

All connections through M12 5-pole connectors. Unshielded cables up to 50 meter long (between sensor and control unit).

Operating temperature: 0 ... +55 °C

0 ... +55 °C

IP67 protection rating

TECHNICAL FEATURES

Minimum detectable object (mm)	12
Max. range (m)	8 IL 10 20 IL 20
Number of photocells per control unit	1 ... 4 with AU SX and AU SXM control units In case of the Mosaic safety controller the number of photocells depends to the number available input related to the system configuration
Response time for each photocell (ms)	7
Output	PNP - 100 mA
Signalling	Status led
Power supply (VDC)	24 ± 20%
Electrical connections	M12 4-pole
Dimensions (mm)	Ø 18 x 85

PART NUMBERS

Ilion photocell includes multi-language instruction manual and CE declaration of conformity.

IL 10 ordering code: **1200201**
IL 20 ordering code: **1200202**

CABLES NEEDED

M12 5-pole. Pin 5 not connected
See page 34 (CDx, CD 9x, CDM 9”, CDM 99)

ACCESSORIES

- Safety interface AU SX. See page 30
- Safety interface AU SXM. See page 31
- Adjustable fixing Bracket. See page 22

ILION

APPROVALS

Safety level (with a control unit AU XS, AU SXM or Mosaic): Type 2 – SIL CL 1 – PL c – Cat. 2

SAFETY LEVEL
TYPE 2
SILCL 1
PL c - Cat. 2

- 2006/42/EC: "Machine Directive"
- 2014/30/EU: "Electromagnetic Compatibility Directive"
- 2014/35/EU: "Low Voltage Directive"
- IEC 61496-1 (ed.3) "Safety of machinery - Electro sensitive protective equipment - General requirements and tests"
- IEC 61496-2 (ed.3) "Safety of machinery - Electro-sensitive protective equipment - Particular requirements for equipment using active opto-electronic protective devices (AOPDs)"
- ISO 13849-1:2006 "Safety of machinery - Safety-related parts of control systems - Part 1: General principles for design"
- IEC 62061 (ed.1) "Safety of machinery - Functional safety of safety-related electrical, electronic and programmable electronic control systems"
- EN 50178:1997 "Electronic equipment for use in power installations"
- EN 55022:2110 "Information Technology Equipment - Radio Disturbance Characteristics - Limits and Methods of Measurement"

MECHANICAL DATA

DIMENSIONS

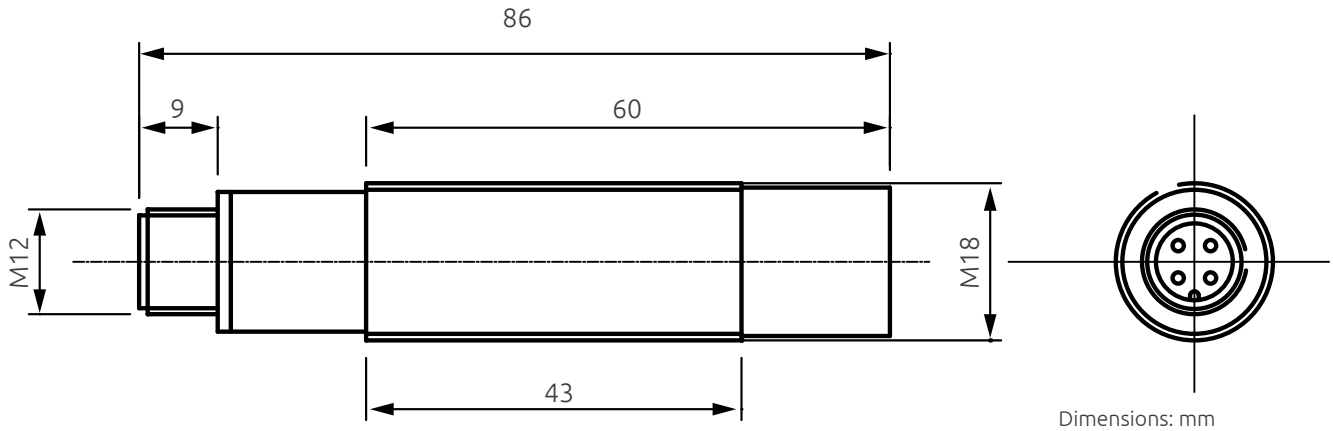

Dimensions: mm

ACCESSORIES

IL FB

ADJUSTABLE FIXING BRACKET

PARTS NUMBERS

Model	Code	Description
IL FB	1200090	Set of 2 adjustable brackets

For Illion photocells.

The IL FB bracket allows both vertical and horizontal adjustment of the optical axis of the photocell.

ULISSE

Ulisse is a Type 2 safety photocell with metal body and M8 3-pole connector.

The photocells must be connected to control unit for esample: standard AU SX or AU SXM control unit with Muting or Mosaic to form a protection system that can be composed of 1, 2, 3 or 4 single beam photocells.

In case of connection with Mosaic safety controller, the number of photocells depends to the configuration of the protection system (for details on the interface see AU SX, AU SXM and Mosaic control units).

Thanks to the very small size, the anodised aluminium case and the glass lenses free from electrostatic dust attraction, Ulisse is the ideal solution for the protection of weaving machines as well as of other applications characterised by high levels of mechanical stress or very restricted spaces.

Operating temperature: 0 ... +55 °C

0 ... +55 °C

IP67 protection rating

TECHNICAL FEATURES

Minimum detectable object (mm)	8
Max. range (m)	6
Number of photocells per control unit	1 ... 4 In case of the Mosaic safety controller the number of photocells depends to the number available input related to the system configuration
Response time for each photocell (ms)	7
Output	PNP - 100 mA
Signalling	Status led
Power supply (VDC)	24 ± 20%
Electrical connections	M8 3-pole
Max. cable length (m)	50 (between sensor and control unit)
Dimensions h x w x d (mm)	58 x 15 x 25

PART NUMBERS

Ulisse photocell includes multi-language instruction manual and CE declaration of conformity.

UPC ordering code: **1200300**

CABLES NEEDED

M8 3-pole. See page 35 (C 8x, C 895)

ACCESSORIES

- Safety interface AU SX. See page 30
- Safety interface AU SXM. See page 31

ULISSE

APPROVALS

SAFETY LEVEL
TYPE 2
SILCL 1
PL c - Cat. 2

Safety level (with a control unit AU XS, AU SXM or Mosaic): Type 2 – SIL CL 1 – PL c – Cat. 2

- 2006/42/EC: “Machine Directive”
- 2014/30/EU: “Electromagnetic Compatibility Directive”
- 2014/35/EU: “Low Voltage Directive”
- IEC 61496-1 (ed.3) “Safety of machinery - Electro sensitive protective equipment - General requirements and tests”
- IEC 61496-2 (ed.3) “Safety of machinery - Electro-sensitive protective equipment - Particular requirements for equipment using active opto-electronic protective devices (AOPDs)"
- ISO 13849-1:2006 “Safety of machinery - Safety-related parts of control systems - Part 1: General principles for design”
- IEC 62061 (ed.1) “Safety of machinery - Functional safety of safety-related electrical, electronic and programmable electronic control systems”
- EN 50178:1997 “Electronic equipment for use in power installations”
- EN 55022:2110 “Information Technology Equipment - Radio Disturbance Characteristics - Limits and Methods of Measurement”

MECHANICAL DATA

DIMENSIONS

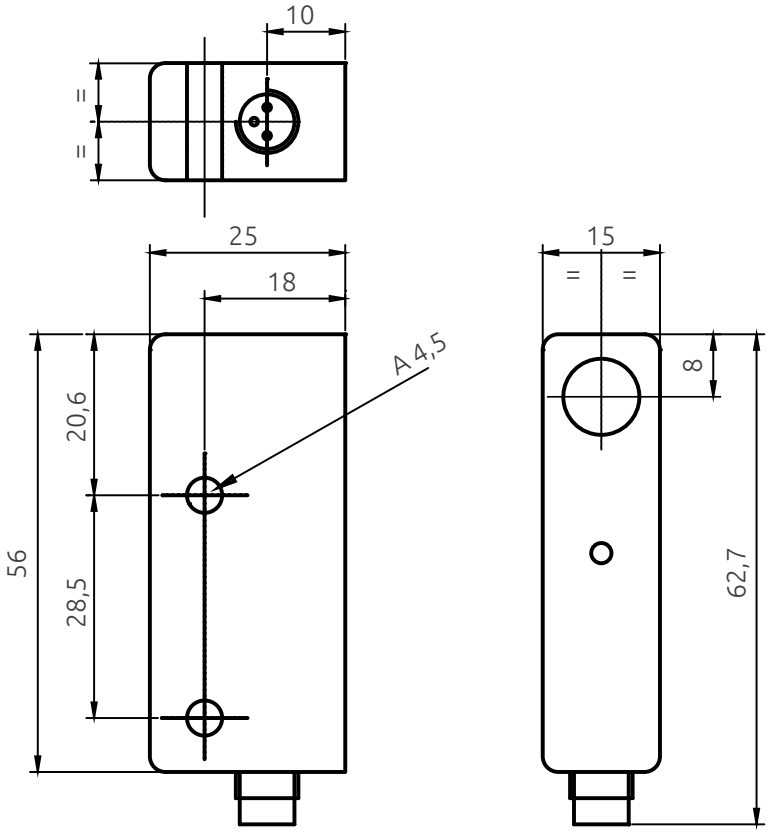

Dimensions: mm

SAFECODER

Shaft version

Hollow shaft version

Safety Sin/Cos incremental encoder, together with Mosaic, comprise a SIL 3 certified safety function for speed monitoring. Available in two models: Shaft or Hollow shaft versions.

APPLICATION EXAMPLE

Any applications requiring speed monitoring of a rotating axis. See the application example on page 34. Features a robust and reliable interface and the ability to handle high mechanical loads.

TECHNICAL FEATURES

Shaft type	Hollow shaft version Ø 12 mm Shaft version Ø 10 mm with flat
Fastening	Safety-Lock™ Allow high rotational speed and high shaft load capacity
Protection rate	Housing and flange side IP67, shaft IP65 (optional IP67)
Immunity to interference	Shock and vibration resistant Insensitive to strong magnetic fields
Resolution	2048 pulse rate
Power supply	SC3 24D2048R - 24 VDC SC3 05D2048R - 5 VDC SC3 24B2048R - 24 VDC SC3 05B2048R - 5 VDC
Connector	Radial M12

APPROVALS

- 2006/42/EC "Machinery Directive"
- 2004/108/EC "Electromagnetic Compatibility (EMC)"
- EN ISO 13849-1 "Safety of machinery: Safety-related parts of control systems. Part 1: General principles for design"
- EN ISO 13849-2 "Safety of machinery: Safety-related parts of control systems. Part 2: Validation"
- IEC 61508 "Functional safety of electrical, electronic and programmable electronic safety-related systems
- EN ISO 61800-5-2 "Adjustable speed electrical power drive systems". Part 5-2 Safety requirements - Functional
- UL (C+US) mark for USA and Canada
- BGIA - Institute for Occupational Safety and Health - Germany

CONNECTORS

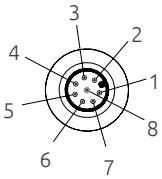

M12 8-pole

1 - GND
2 - + V
3 - A: Sine output
4 - Ā: Sine output
5 - B: Cosine output
6 - B̄: Cosine output
shield - PE

PART NUMBERS

1100102	SC3 24D2048R - 24 VDC Hollow Shaft version Ø 12 mm
1100103	SC3 05D2048R - 5 VDC Hollow Shaft version Ø 12 mm
1100104	SC3 24B2048R - 24 VDC Shaft version Ø 10 mm with flat
1100105	SC3 05B2048R - 5 VDC Shaft version Ø 10 mm with flat

CABLES NEEDED

M12 8-pole shielded. See page 36

NOTE: cable supplied with M12 8-pole connettor at one end only. The other side must be cut off at correct length and crimped with RJ45 connector (not included).

SAFETY LEVEL
SIL 3
SIL3 - SILCL 3
PL e - Cat. 4

SAFELOCK

Safelock is a safety switch utilised in the protection of personnel when opening doors leading to dangerous areas. It acts by monitoring and interrupting the safety circuit during dangerous scenarios.

The solenoid locks and unlocks access to the dangerous area, guaranteeing safety until the danger has stopped. Available models

SLK-M

Retention mechanism actuated by a spring and unlocked by ON current. Guard locking by spring force, release by applying voltage to the guard locking solenoid.

SLK-E

Retention mechanism actuated by ON current and unlocked by spring. Guard locking by applying voltage to the guard locking solenoid, release by spring force.

- Actuating head made of plastic or metal
- Auxiliary release on the front. Used for releasing the guard locking with the aid of a tool. To protect against tampering, the auxiliary release is sealed with sealing lacquer
- Approach direction: horizontal and vertical. Can be adjusted in 90° steps
- Any installation position

Operating temperature: -20 ... +55 °C

-20 ... + 55 °C

IP67 protection rating

TECHNICAL FEATURES

Housing material	Reinforced thermoplastic
Contact material	Silver alloy, gold flashed
Switching principle	Slow-action switching contact
Number of door position positively driven contacts	2
Number of guard lock monitoring positively driven contacts	1
Approach speed	Max. 20 m/min
Actuation frequency	1200 1/h
Guard locking principle	Closed-circuit current principle
Force	Locking force (Fmax): ≥1 kN (plastic), ≥2 kN (metal) Locking force (FZh): 1,5 kN 0,7 kN (plastic), 1,5 kN (metal) Retention force: 20 N Extraction force: 30 N Actuating force: 35 N
Solenoid operating voltage	AC/DC 24 V -15% ... +10%
Short circuit protection	4 A
Switching voltage	12 V Min at 10 mA
Switching current	1 mA Min at 24 V
Power consumption	6 W

APPROVALS

- 2006/42/EC: "Machine Directive"
- EN 60947-5-1:2004/A1:2009 Low-voltage switchgear and controlgear. Control/circuit devices and switching elements. Electromechanical control circuit devices
- EN 60947-5-1:2004/A1:2009 Annex K
- EN ISO 14119:2013 Safety of machinery - Interlocking devices associated with guards - Principles for design and selection

PART NUMBERS

Ordering code	Model	Guard lock	Description
1290100	SLK-M-P-2NC-24	Mechanical	Safelock with mechanical guard lock and plastic actuating head. Switching element: 2 NC, feedback 1 NC
1290102 *	SLK-M-M-2NC-24		Safelock with mechanical guard lock and metal actuating head. Switching element: 2 NC, feedback 1 NC
1290104	SLK-E-P-2NC-24	Elecrtrical	Safelock with electrical guard lock and plastic actuating head. Switching element: 2 NC, feedback 1 NC
1290106 *	SLK-E-M-2NC-24		Safelock with electrical guard lock and metal actuating head. Switching element: 2 NC, feedback 1 NC

* Contact ReeR to check availability

BLOCK DIAGRAM

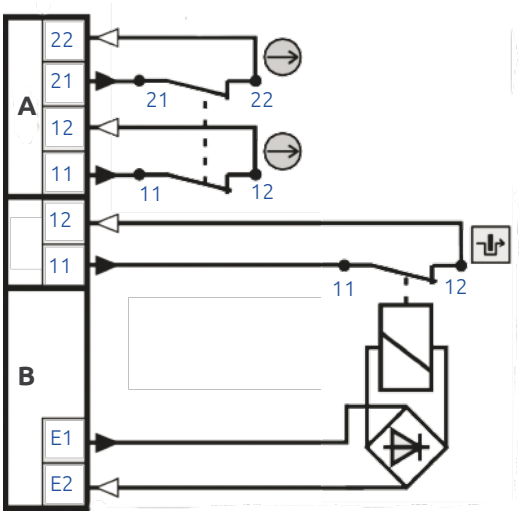

2NC Model
For monitoring the guard locking (built-in solenoid)
slow-action switching contact 2 NC

LIVELLI DI SICUREZZA

3 different safety functions according to the standard EN ISO 13489-1

Category / Safety Level	Safety device
Cat. 1 / PL c	1 Safelock + 1 safety relay AD SRE3C or 1 input of the Mosiac safety controller
Cat. 3 / PL d	1 Safelock + 1 safety relay AD SRE3C or 2 inputs of the Mosiac safety controller + fault exclusion according to the standard (EN ISO 13849-2)
	1 Safelock + 2 Magnus RFID + safety relay AD SR1 or 2 inputs of the Mosiac safety controller
	2 Safelock + 1 safety relay AD SRE3C or 2 inputs of the Mosiac safety controller
Cat. 4 / PL e	2 Safelock + 2 safety relay AD SRE4C or 4 inputs of the Mosiac safety controller

ACTUATORS

Model		Ordering code	Description
ACT-S-S-RB		1290302	Actuator standard, straight with rubber bush Two stainless safety screws per actuator Actuators with rubber bushings
ACT-S-A-RB		1290303	Actuator standard, angled with rubber bush Two stainless safety screws per actuator
ACT-S-H-TB		1290304	Actuator standard, hinged, top-botton Actuators made of stainless steel Two stainless safety screws per actuator For doors hinged at top and bottom
ACT-S-H-LR		1290305	Actuator standard, hinged, left-right Actuators made of stainless steel Two stainless safety screws per actuator For doors hinged on right and left
ACT-F-S-RB		1290306 *	Actuator for insertion funnels, straight with rubber bush Two stainless safety screws per actuator Actuators with rubber bushings
ACT-F-A-RB		1290307 *	Actuator for insertion funnels, angled with rubber bush Two stainless safety screws per actuator Actuators with rubber bushings
ACT-F-H-TB		1290308 *	Actuator for insertion funnels, hinged, top-botton Actuators made of stainless steel Two stainless safety screws per actuator For doors hinged at top and bottom
ACT-FH-LR		1290309 *	Actuator for insertion funnels, hinged, left-right Actuators made of stainless steel Two stainless safety screws per actuator For doors hinged on right and left
ACT-F-IF		1290311 *	Insertion funnel

* Contact ReeR to check availability

MECHANICAL DATA

DIMENSIONS

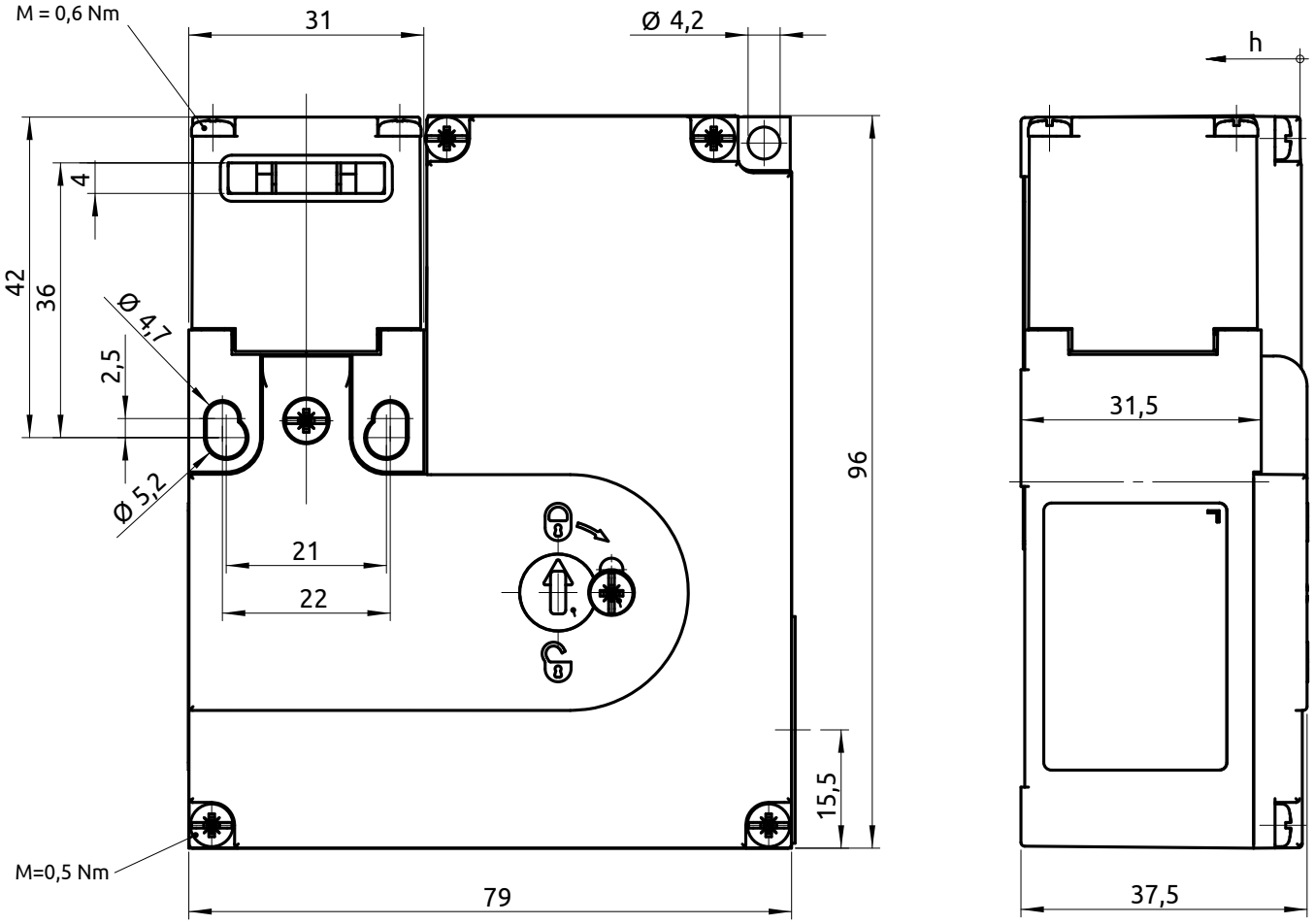

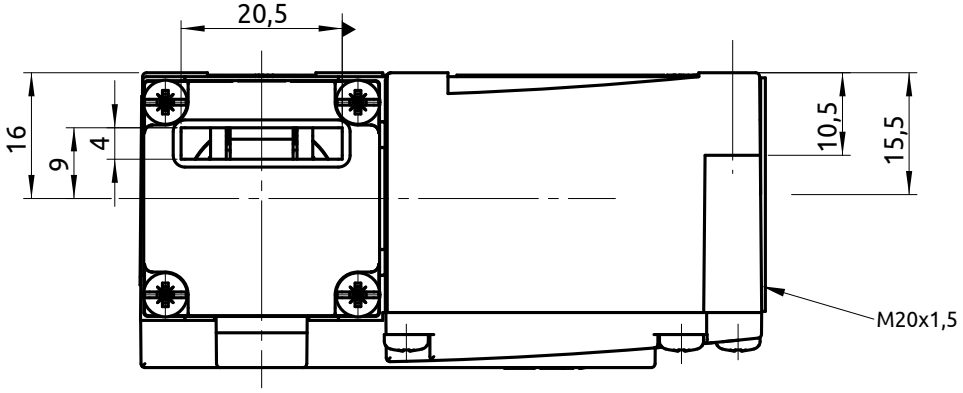

Dimensions: mm

INTERFACES

Control unit for safety photocells Ilion and Ulisse, which can be combined to form a Type 2 safety system.

Up to 4 photocells may be connected.

With guided-contact safety relays.

Start/Restart interlock.

EDM Feedback input for external contactors monitoring.

Self test every 5 seconds.

APPROVALS

- 2006/42/EC: "Machine Directive"
- 2014/30/EU: "Electromagnetic Compatibility Directive"
- 2014/35/EU: "Low Voltage Directive"
- EN 61496-1:2013 "Safety of machinery - Electro sensitive protective equipment - General requirements and tests"
- IEC 62061 (ed.1) (SILCL1) "Safety of machinery - Functional safety of safety-related electrical, electronic and programmable electronic control systems"
- EN ISO 13849-1: 2008 (Cat. 2, PL c) "Safety of machinery - Safety-related parts of control systems - Part 1: General principles for design"
- EN 50178: 1997 "Electronic equipment for use in power installations"
- EN 55022: 2010 "Information Technology Equipment- Radio Disturbance Characteristics- Limits and Methods of Measurement"
- UL (C+US) mark for USA and Canada

SAFETY LEVEL
TYPE 2
SILCL 1
PL c - Cat. 2

AU SX

TYPE 2 CONTROL UNIT FOR ILION AND ULISSE PHOTOCELLS

TECHNICAL FEATURES

Safety relay outputs	2 NO - 2 A 250 VAC
Status output	PNP - 100 mA at 24 VDC
Response time (ms)	≤ 30
Start/Restart command according to IEC 61496-1	Manual or automatic Start/Restart selectable on terminal block
Signalling	LED indication of input/output status and diagnosis
Power supply (VDC)	24 ± 20%
Electrical connections	On terminal block
Operating temperature (°C)	0 ... 55
Protection rating	IP20 for housing IP2X for terminal block
Fastening	DIN rail fastening according to EN 50022-35 standard
Dimensions h x w x d (mm)	99 x 22,5 x 114

PART NUMBERS

AU SX module includes multi-language instruction manual and CE declaration of conformity.

Ordering code: **1201710**

AU SXM control unit, with integrated Muting functions, for safety photocells Ilion and Ulisse, which can be combined to form a Type 2 safety system.

Up to 4 photocells may be connected.

2-sensor Muting logics.

With guided-contact safety relays.

Muting time-out selectable.

Start/Restart interlock.

EDM Feedback input for extra external contactors monitoring.

Self test every 5 seconds.

APPROVALS

- 2006/42/EC: "Machine Directive"
- 2014/30/EU: "Electromagnetic Compatibility Directive"
- 2014/35/EU: "Low Voltage Directive"
- EN 61496-1:2013 "Safety of machinery - Electro sensitive protective equipment - General requirements and tests"
- IEC 62061 (ed.1) (SILCL1) "Safety of machinery - Functional safety of safety-related electrical, electronic and programmable electronic control systems"
- EN ISO 13849-1: 2008 (Cat. 2, PL c) "Safety of machinery - Safety-related parts of control systems - Part 1: General principles for design"
- EN 50178: 1997 "Electronic equipment for use in power installations"
- EN 55022: 2010 "Information Technology Equipment- Radio Disturbance Characteristics- Limits and Methods of Measurement"
- UL (C+US) mark for USA and Canada

SAFETY LEVEL
TYPE 2
SILCL 1
PL c - Cat. 2

AU SXM

TYPE 2 CONTROL UNIT WITH INTEGRATED MUTING FOR ILION AND ULISSE PHOTOCELLS

TECHNICAL FEATURES

Inputs for Muting sensors	2 inputs 0 or 24 VDC – PNP or relay – dark-on
Muting Enable input	0 or 24 VDC – PNP or relay
Safety relay outputs	2 NO - 2A 250 VAC
Status output	PNP - 100 mA at 24 VDC
Muting lamp output	24 VDC; 0,5 - 5 W
Muting time-out	30 sec. or infinite, selectable
Override	2 operating modes selectable: manual action with hold to run or automatic with pulse command
Override time-out (min)	15
Response time (ms)	≤ 30
Start/Restart command according to IEC 61496-1	Manual or automatic Start/Restart selectable on terminal block
Signalling	LED indications of input/output status, Muting sensor inputs, diagnosis
Power supply (VDC)	24 ± 20%
Electrical connections	On terminal blocks
Operating temperature (°C)	0 ... 55
Protection rating	IP20 for housing IP2X for terminal blocks
Fastening	DIN rail fastening according to EN 50022-35 standard
Dimensions h x w x d (mm)	99 x 35 x 114

PART NUMBERS

AU SXM module includes multi-language instruction manual and CE declaration of conformity.

Ordering code: **1201711**

INTERFACES

MG d1 is a safety control unit for monitoring up to 8 Magnus safety switches in series.

With 1 safety switch connected, a PL d safety level is reached.

It features a two positively mechanically linked contacts and EDM (External Device Monitoring).

APPROVALS

- 2006/42/EC: "Machine Directive"
- 2014/30/EU: "Electromagnetic Compatibility Directive"
- 2014/35/EU: "Low Voltage Directive"
- EN 61508-1:1998 "Functional safety of electrical/electronic programmable electronic safety related systems - General requirements"
- EN 61508-2:2000 "Functional safety of electrical/electronic/ programmable electronic safety related systems - Requirements for electrical/electronic/programmable electronic safety-related systems"
- EN 61508-3:1998 "Functional safety of electrical/electronic programmable electronic safety related systems: Software requirements"
- ISO 13849-1:2008 "Safety of machinery - Safety-related parts of control systems - Part 1: General principles for design"
- IEC 62061: "Safety of machinery - Functional safety of safety-related electrical, electronic and programmable electronic control systems"

MG d1

PL D CONTROL UNIT FOR MAGNUS MAGNETIC SWITCHES

TECHNICAL FEATURES

Safety relay outputs	2 NO - 3 A - 250 VAC Each NO safety output line is interrupted twice by the two relays
Response time (ms)	< 20
External Device Monitoring	Yes
Signalling	LED indicators for status and diagnostic
Power supply (VDC)	24 (±10%)
Electrical connection	On terminal block
Operating temperature (°C)	0 ... 55
Protection rating	IP40 for housing IP2X for terminal block
Fastening	DIN rail fastening according to EN 50022-35 standard
Dimensions h x w x d (mm)	75 x 25 x 94

MG d1 module includes multi-language instruction manual and CE declaration of conformity.

PART NUMBERS

Ordering code: **1291050**

CABLES

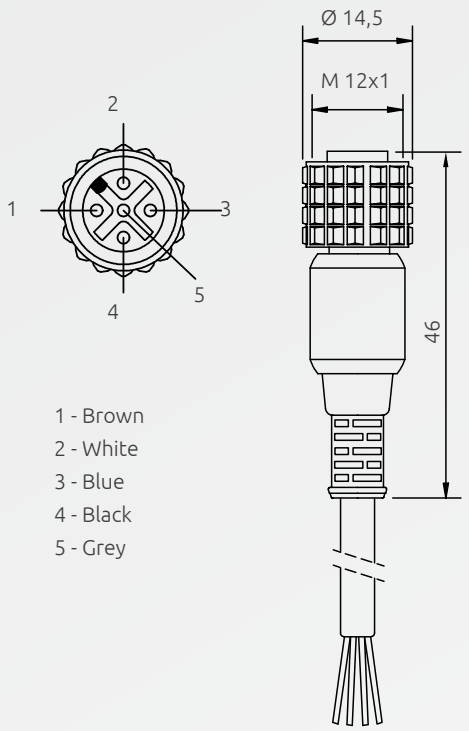

CD x

M12 STRAIGHT CONNECTOR 5-POLE

Model	Code	Description
CD 5	1330950	Pre-wired cable 5 m
CD 10	1330956	Pre-wired cable 10 m
CD 15	1330952	Pre-wired cable 15 m
CD 20	1330957	Pre-wired cable 20 m
CD 25	1330949	Pre-wired cable 25 m
CD 50	1330965	Pre-wired cable 50 m

Note - Pin 5 not connected

Cables for Ilion photocells.

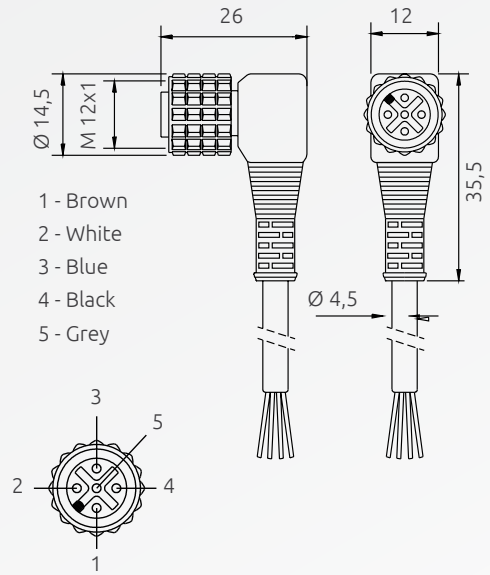

CD 9x

M12 90° ANGLE CONNECTOR 5-POLE

Model	Code	Description
CD 95	1330951	Pre-wired cable 5 m
CD 910	1330958	Pre-wired cable 10 m
CD 915	1330953	Pre-wired cable 15 m

Note - Pin 5 not connected

Cables for Ilion photocells.

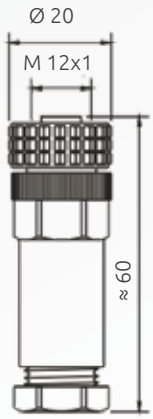

CDM 9

M12 STRAIGHT CONNECTOR 5-POLE SCREW TERMINAL, PG9 CABLE GLAND

Model	Code
CDM 9	1330954

Cables for Ilion photocells.

CABLES

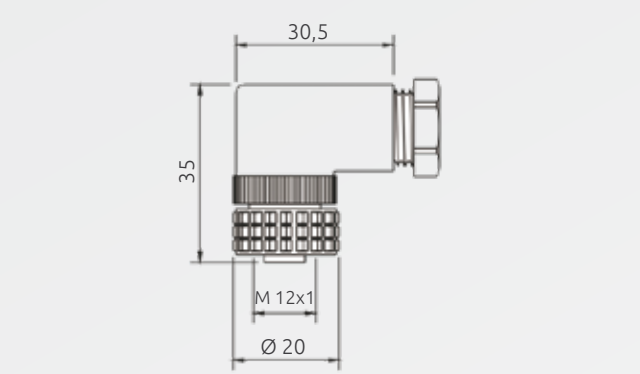

CDM 99

M12 STRAIGHT CONNECTOR 5-POLE SCREW TERMINAL, PG9 CABLE GLAND

Model	Code
CDM 99	1330955

Cables for Ilion photocells.

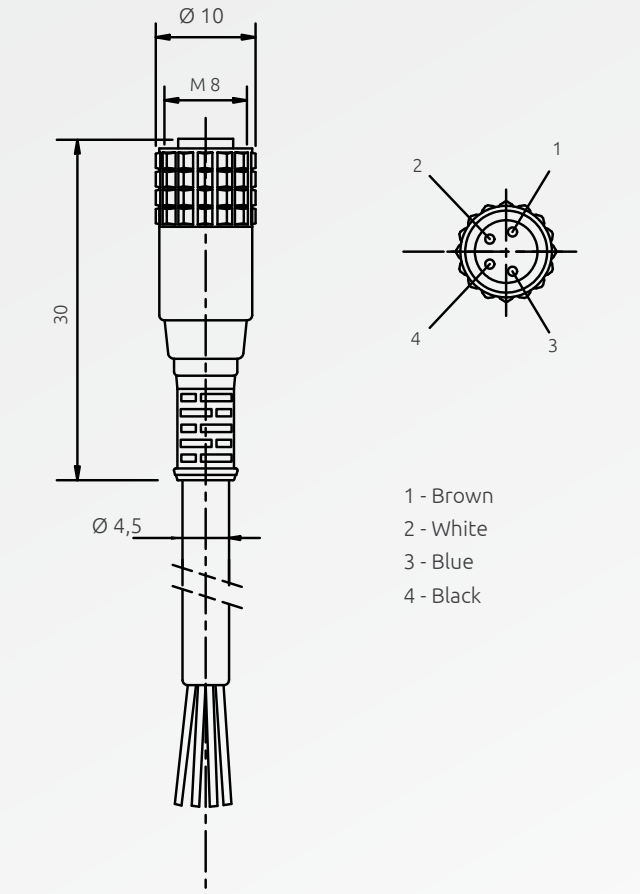

C8 Gx

M8 STRAIGHT CONNECTOR 4-POLE

Model	Code	Description
C8 G3	1291070	Pre-wired cable 3 m
C8 G5	1291072	Pre-wired cable 5 m

Cables for Magnus MG magnetic sensors.

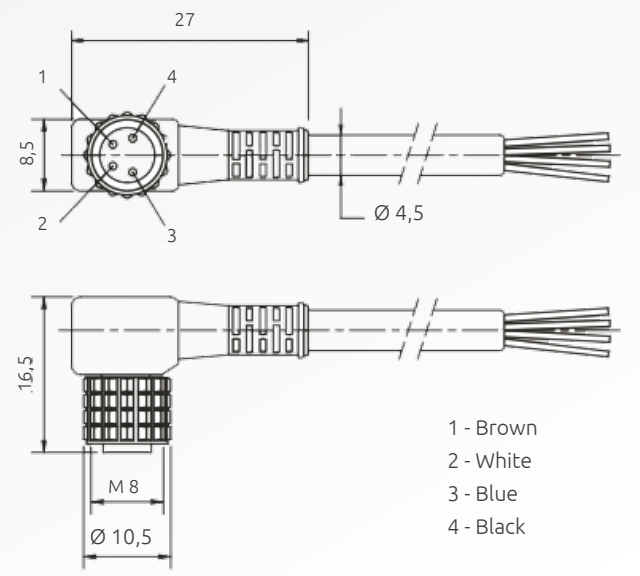

C8 G9x

M8 90° ANGLE CONNECTOR 4-POLE

Model	Code	Description
C8 G93	1291071	Pre-wired cable 3 m
C8 G95	1291073	Pre-wired cable 5 m

Cables for Magnus MG magnetic sensors.

CABLES

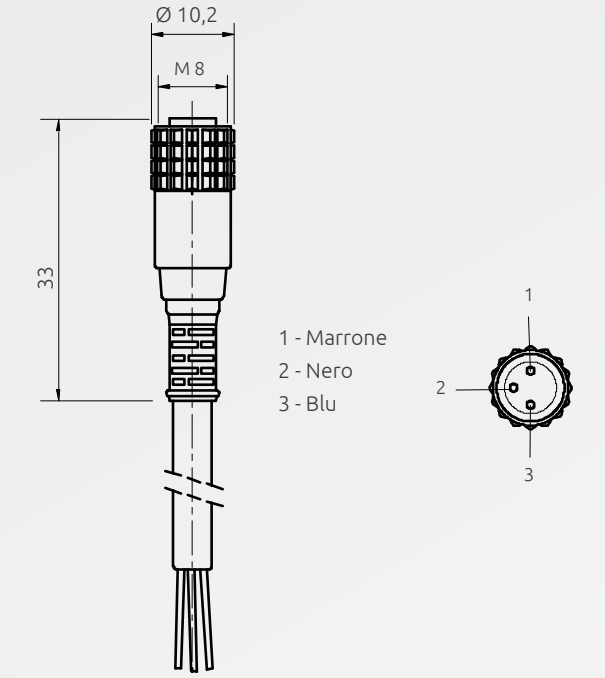

CABLES C 8X

M8 STRAIGHT CONNECTOR 3-POLE

Model	Code	Description
C 85	1200217	Pre-wired cable 5 m
C 815	1200219	Pre-wired cable 15 m

Cables for Ulisse photocells.

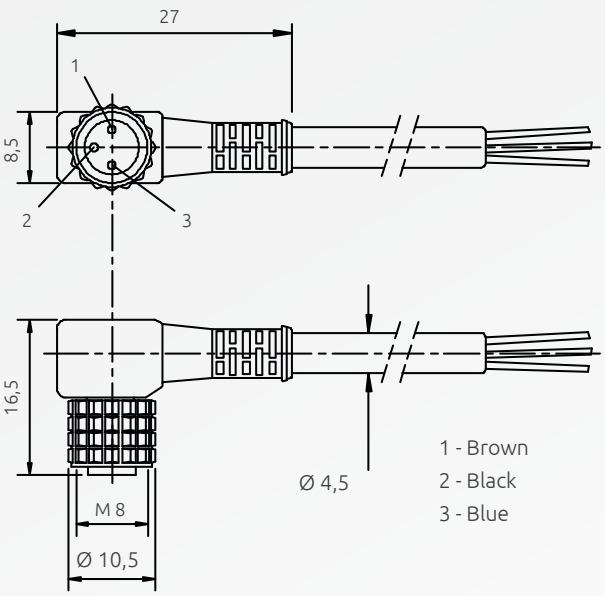

C 895

M8 90° ANGLE CONNECTOR 3-POLE

Model	Code	Description
C 895	1200217	Pre-wired cable 5 m

Cable for Ulisse photocells.

CABLES

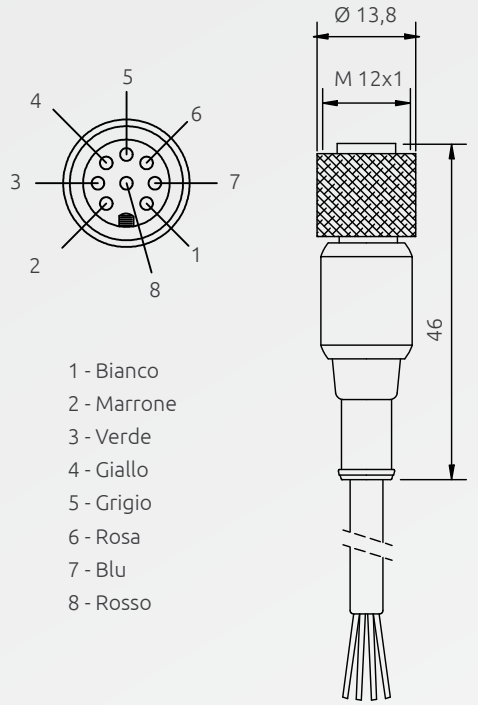

C8D x SH

M12 STRAIGHT CONNECTOR, 8 POLES, SHIELDED

Model	Code	Description
C8D 5 SH	1330930	Pre-wired shielded cable 5 m
C8D 10 SH	1330931	Pre-wired shielded cable 10 m
C8D 15 SH	1330932	Pre-wired shielded cable 15 m

Cables for Safecoder.

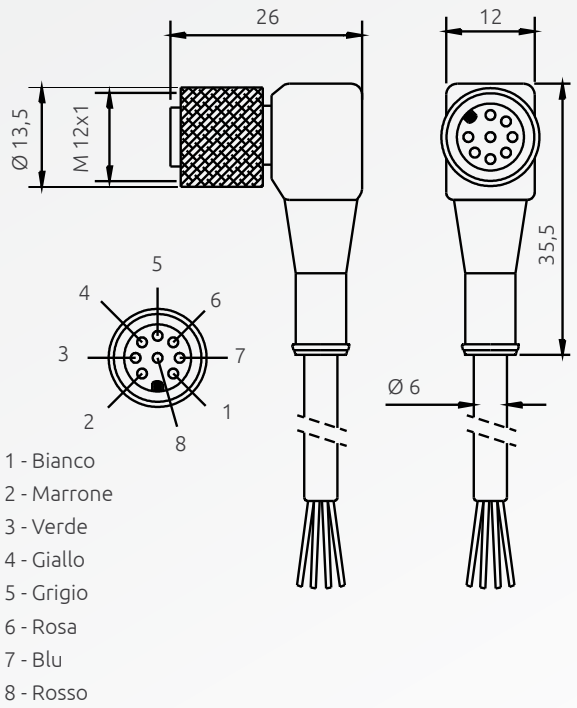

C8D9x SH

M12 90° ANGLE CONNECTOR, 8 POLES, SHIELDED

Model	Code	Description
C8D95 SH	1330933	Pre-wired shielded cable 5 m
C8D910 SX	1330934	Pre-wired shielded cable 10 m
C8D915 SH	1330935	Pre-wired shielded cable 15 m

Cables for Safecoder.

CABLES

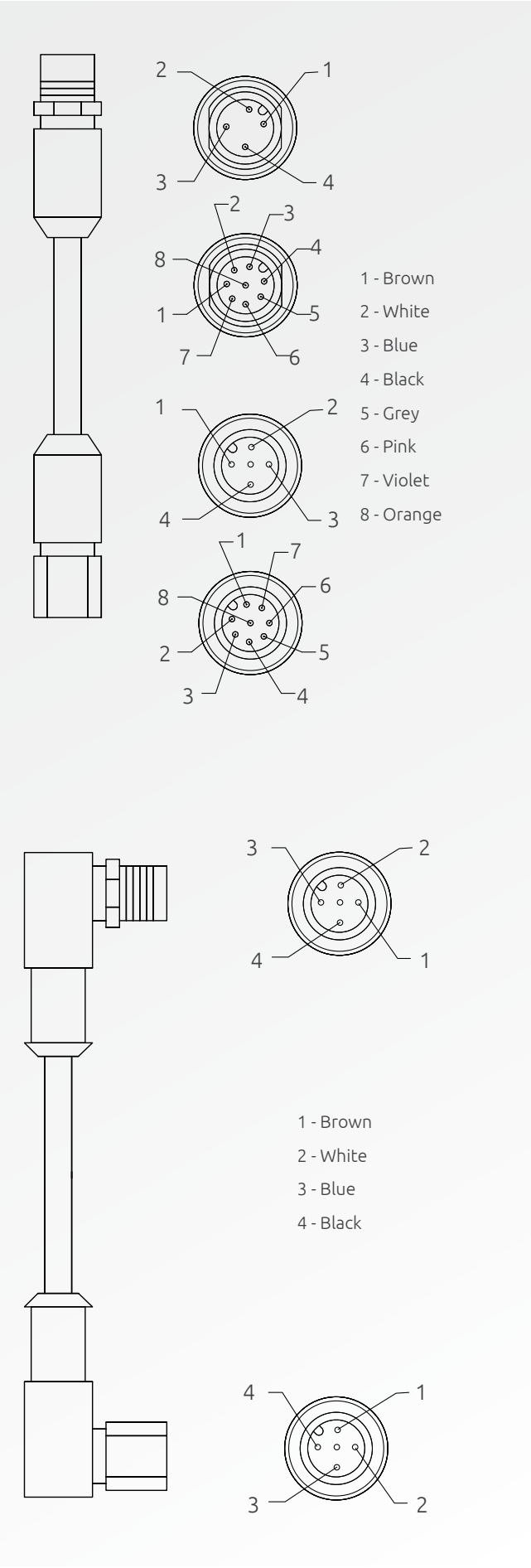

EC S4 x

MALE-FEMALE M12 STRAIGHT CONNECTOR 4-POLE

Model	Code	Description
MRFID EC S4 1	1292414	Pre-wired cable 1 m
MRFID EC S4 3	1292415	Pre-wired cable 3 m
MRFID EC S4 5	1292416	Pre-wired cable 5 m
MRFID EC S4 10	1292417	Pre-wired cable 10 m

Cables for Magnus RFID sensors.

EC S8 x

MALE-FEMALE M12 STRAIGHT CONNECTOR 8-POLE

Model	Code	Description
MRFID EC S8 1	1292422	Pre-wired cablee 1 m
MRFID EC S8 3	1292423	Pre-wired cable 3 m
MRFID EC S8 5	1292424	Pre-wired cable 5 m
MRFID EC S8 10	1292425	Pre-wired cable 10 m

Cables for Magnus RFID sensors.

EC L4 x

MALE-FEMALE M12 90° ANGLE CONNECTOR 4-POLE

Model	Code	Description
MRFID EC L4 1	1292418	Pre-wired cable 1 m
MRFID EC L4 3	1292419	Pre-wired cable 3 m
MRFID EC L4 5	1292420	Pre-wired cable 5 m
MRFID EC L4 10	1292421	Pre-wired cable 10 m

Cables for Magnus RFID sensors.

CABLES

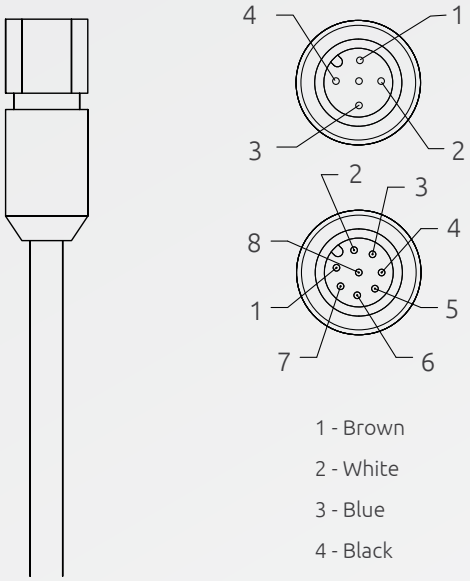

1 - Brown
2 - White
3 - Blue
4 - Black
5 - Grey
6 - Pink
7 - Violet
8 - Orange

EC C4 x

FEMALE M12 STRAIGHT CONNECTOR 4-POLE

Model	Code	Description
MRFID EC C4 1	1292406	Pre-wired cable 1 m
MRFID EC C4 3	1292407	Pre-wired cable 3 m
MRFID EC C4 5	1292408	Pre-wired cable 5 m
MRFID EC C4 10	1292409	Pre-wired cable 10 m

Cables for Magnus RFID sensors.

EC C8 x

FEMALE M12 STRAIGHT CONNECTOR 8-POLE

Model	Code	Description
MRFID EC C8 1	1292410	Pre-wired cable 1 m
MRFID EC C8 3	1292411	Pre-wired cable 3 m
MRFID EC C8 5	1292412	Pre-wired cable 5 m
MRFID EC C8 10	1292413	Pre-wired cable 10 m

Cables for Magnus RFID sensors.

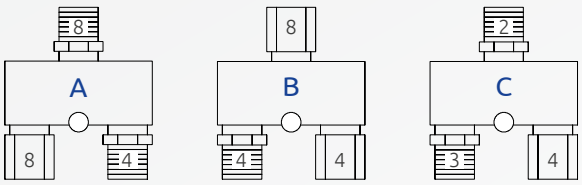

Type A To gain status output from the connected sensor
Type B For series connections of 2 or more sensors
Type C To introduce additional power supplies in long series

T CONNECTOR M12

T ADAPTER

Model	Code	Description
MRFID TC A	1292404	M12 T type A connector
MRFID TC B	1292403	M12 T type B connector
MRFID TC C	1292405	M12 T type C connector

Connectors for Magnus RFID sensors.

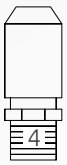

TP

TERMINATION PLUG

Model	Code	Description
MRFID TP	1292402	Termination plug

For Magnus RFID sensors.

At ReeR we put our Customers always first

ReeR after sales service is committed to support all customers that need technical guidance regarding functionality, handling and installation of our products.

Customer Service Hotline
+39 011 24 82 215
Monday to Friday 8.30 -12.30 and 13.30-18.00 (CET)

or contact
aftersales@reer.it

For product returns please visit www.reersafety.com for further information.

Safety. Detection. Control.

ReeR SpA
Via Carcano, 32
10153 Torino
Italy
T +39 011 248 2215
F +39 011 859 867

www.reersafety.com | info@reer.it

More than 50 years of quality and innovation

Founded in Turin (Italy) in 1959, ReeR distinguished itself for its strong commitment to innovation and technology.

A steady growth throughout the years allowed ReeR to become a point of reference in the safety automation industry at a worldwide level.

The Safety Division is in fact today a world leader in the development and manufacturing of safety optoelectronic sensors and controllers.

ReeR is ISO 9001, ISO 14001 and BS OHSAS 18001 certified.

Made in Italy
since 1959

Issue 1

Rev. 1.2
February 2018
8946228 Safety Sensors Catalogue English
Printed in Italy